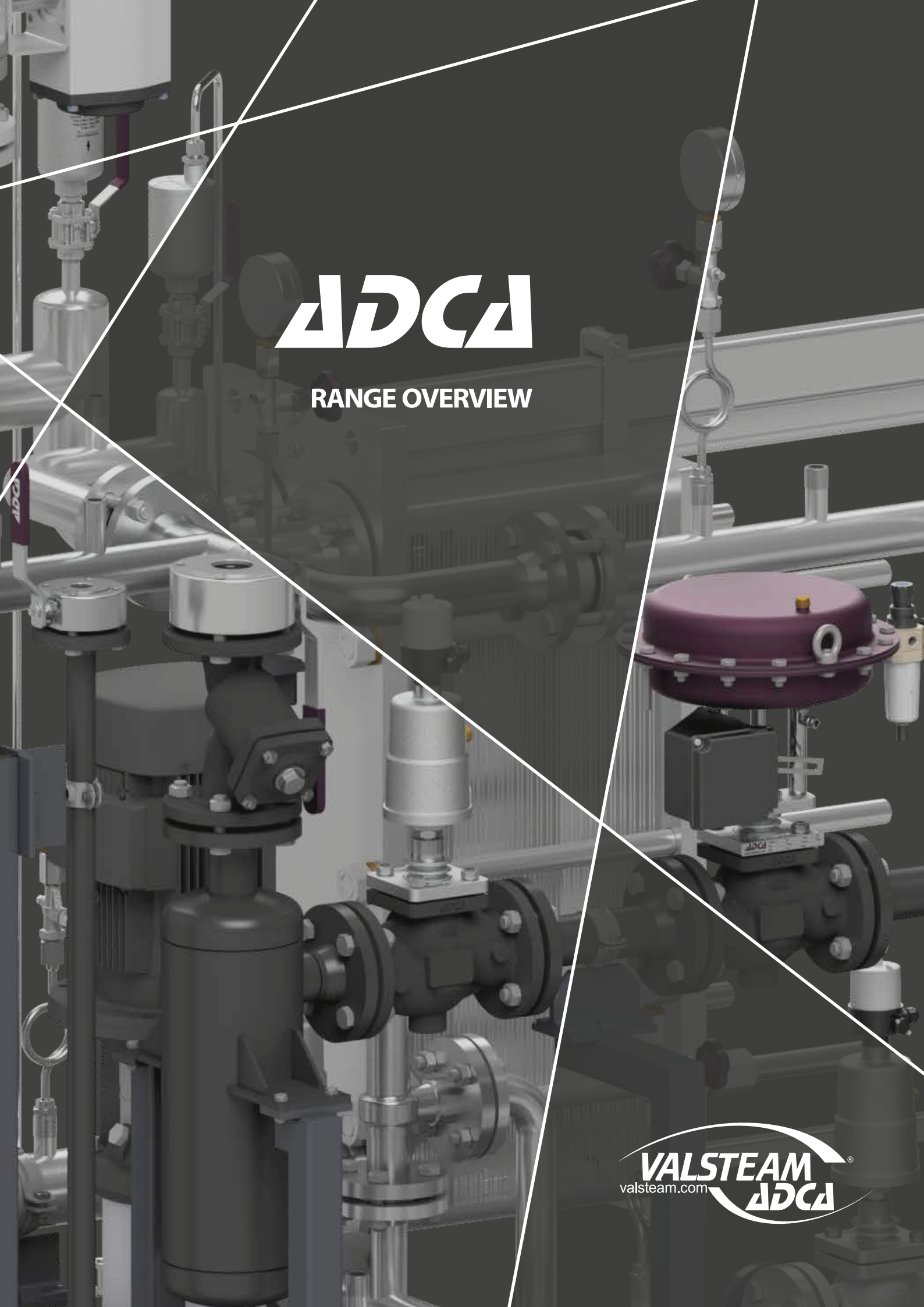

ADCA

RANGE OVERVIEW

VALSTEAM ADCA®
valsteam.com

VALSTEAM ADCA
EXPERTS IN FLUID CONTROL SYSTEMS

Valsteam ADCA is a manufacturer of groundbreaking products for steam and other industrial fluid systems.

At Valsteam ADCA we assure the complete production cycle, in-house: design, machining, welding, testing, quality and packaging. A complex system that depends on our passion, dedication, experience and technology.

We are Innovators by nature, always researching and developing efficient solutions so you can get the most out of your fluid system.

COMPLETE RANGE
FOR INDUSTRIAL FLUID SYSTEMS

We stand as a one-stop-shop with one of the largest ranges
of steam equipment in the world, dedicated to virtually every industry.

STEAM TRAPS

An efficient steam trap defines the frontier between steam and condensed liquid, and allows the proper functioning of the installation with better energy management.

PMO
Up to 275 bar

TMO
Up to 580 ºC

SIZES
1/2" to 6" - DN 15 to DN 150

DISCHARGE CAPACITIES
Over 100,000 kg/h

UNIVERSAL

UniADCA

BIMETALLIC

FOR THE HIGHEST PRESSURES!

For the most demanding high pressure applications, there is a solution amongst our range.

INVERTED BUCKET

THERMOSTATIC

THERMODYNAMIC

SANITARY

ADCAPure

FLOAT & THERMOSTATIC

CENTRAL MECHANISM

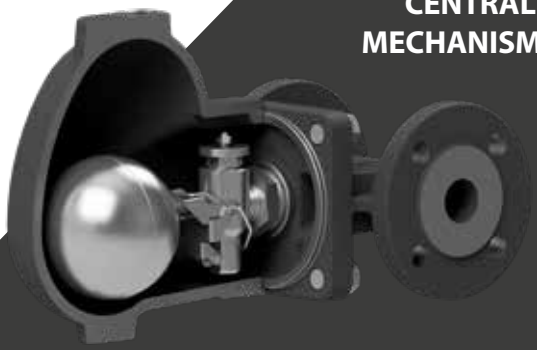

For easier maintenance and quick flow direction change.

OPTIONS

Steam lock release

Float lifting lever

Vacuum breaker

Hand vent valve

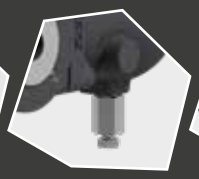

Blowdown valve

Anti-freeze device

PRESSURE REGULATORS

An extensive range of pressure reducing (PRV) and sustaining (PS) valves for steam and other gases and liquids. Controlling pressure at the point of use and many other areas of the plant.

PMO & TMO
Up to 220 bar & 300 ºC

FLOW RATE CAPACITIES
Kvs 0,06 to 204 m3/h

SIZES
1/4" to 6" - DN 08 to DN 150

REGULATING RANGES
From 0,05 to 200 bar

DIRECT ACTING

PRESSURE SUSTAINING

PILOT OPERATED

SANITARY

ADCAPure

BLANKETING

OPTIONS FOR EVERY NEED

- External sensing
- Dome loaded
- Top cap
- Leakage line connection
- Self-relieving
- Soft sealing
- Gauge connections

CONTROL VALVES

Modern plants demand accurate distribution and control of fluids, where control valves play a crucial role.

PMO
Up to 50 bar

TMO
Up to 400 ºC

SIZES
1/2" to 8" - DN 15 to DN 200

FLOW RATE CAPACITIES
Kvs 0,01 to 630 m³/h

TWO WAY

ADCATrol

We offer solutions for special applications, such as meeting low noise and fugitive emission requirements, micro flow, cavitation protection and much more.

THREE WAY

SELF-ACTING TEMPERATURE REGULATORS

MODULAR DESIGN... TO MEET YOUR PROCESS NEEDS

- Soft, stellited and metal valve sealing
- Low noise, anti-cavitation single and multi-stage trims
- Pressure balancing trims
- Reduced bore trims
- Silencers
- And more...

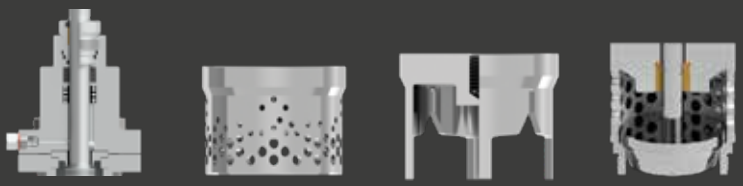

PNEUMATIC & ELECTRIC ACTUATORS

ACTUATOR ACCESSORIES

- Positioners
- I/P converters
- Solenoid valves
- Volume boosters
- Feedback units
- Filter regulators
- Special coatings and finishes
- Limit switches and limit switch boxes

OVERFLOW VALVES

INSTRUMENTATION

SANITARY

ADCAPure

BOILER EQUIPMENT

- Sample coolers
- Feedwater valves
- Blowdown expansion vessels
- Blowdown controllers and probes
- Intermittent and TDS blowdown valves

PIPELINE ANCILLARIES

Although often overlooked, ancillary items are vital for the reliability and safe operations of any system. We produce a vast range of pipeline ancillaries for steam and other gases and liquids.

SIGHT GLASSES

AIR AND GAS FLOAT TRAPS

NON-RETURN VALVES

ISOLATION VALVES

VACUUM BREAKERS

PIPELINE STRAINERS

SANITARY

ADCAPure

AUTOMATIC AIR & GAS VENTS

One of the widest offers in the market. Designed for all types of low and high-pressure applications. Covering a wide range of flow rates in various sizes and multiple options to choose from.

SPECIAL EQUIPMENT

Wide range of equipment for all parts of your steam system. Including heat transfer and heat recovery systems, boiler house equipment and specially designed packages.

HUMIDITY SEPARATORS

DIRECT STEAM HUMIDIFIERS

ADCATherm

HEAT EXCHANGERS

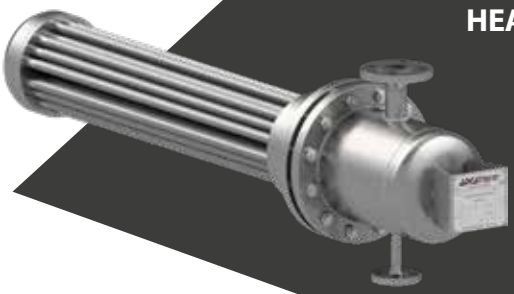

STEAM WATER MIXERS

ADCAMix

BLOWDOWN & FLASH VESSELS

SAMPLE COOLERS

SANITARY

ADCAPure

STEAM INJECTORS

DEARATOR HEADS

ADCAMat

PUMPS & PUMP TRAPS

- Several design options and sizes from small 1”- DN 25 to 4” - DN100
- Loads up to 30.000 kg/h and higher if fitted in parallel
- Immune to cavitation or NPSH issues
- Suitable for ATEX environments
- Operating up to 10 bar @ 185 ºC
- No electrical requirements
- Discharge under vacuum
- Low running costs

SPECIAL EQUIPMENT

Our company name features "engineering" for a reason. We genuinely do have the knowledge, expertise and facilities in-house to develop tailor-made solutions that will improve our customer processes.

ADCAMat

CONDENSATE RECOVERY UNITS

INFINITE POSSIBILITIES

- Mechanical or electrical condensate recovery units
- Flash steam heat recovery units
- Pressure reducing stations
- Heat transfer packages
- Sampling stations
- ...and many others

ADCATherm

PWHU
PACKAGED WATER HEATING UNITS

Designed for instant hot water heating in a safe and efficient way, using steam as primary fluid. Built to meet application and space requirements in a plug and play pressure tested solution, reducing on-site labour and disruption time.

QUALITY & TECHNOLOGY

QUALITY IS MORE THAN A STATEMENT

Apart from following ISO international quality standards, we also follow European directives applied to this sector by keeping our technicians and procedures approved by testing and certification organizations.

OBSESSED WITH TECHNOLOGY

With more than 15.000 different parts manufactured in house and millions of possible product configurations, we continue to keep full control of the whole production cycle. Investment in state-of-the-art technology in the different company sectors is one of the keys to this success. The consequence is increased productivity and a level of quality and reliability that our customers can trust on.

Check our videos:

Find out more:

VALSTEAM ADCA ENG. S.A.

Zona Ind. da Guia, Pav.14 - Brejo
3105-467 Guia PBL
PORTUGAL

(+351) 236 959 060
(+351) 236 952 950
adca@valsteam.pt

www.valsteam.com

DISTRIBUTOR:

PRODUCTS MANUFACTURED
IN PORTUGAL

LRQA
CERTIFIED
ISO 9001

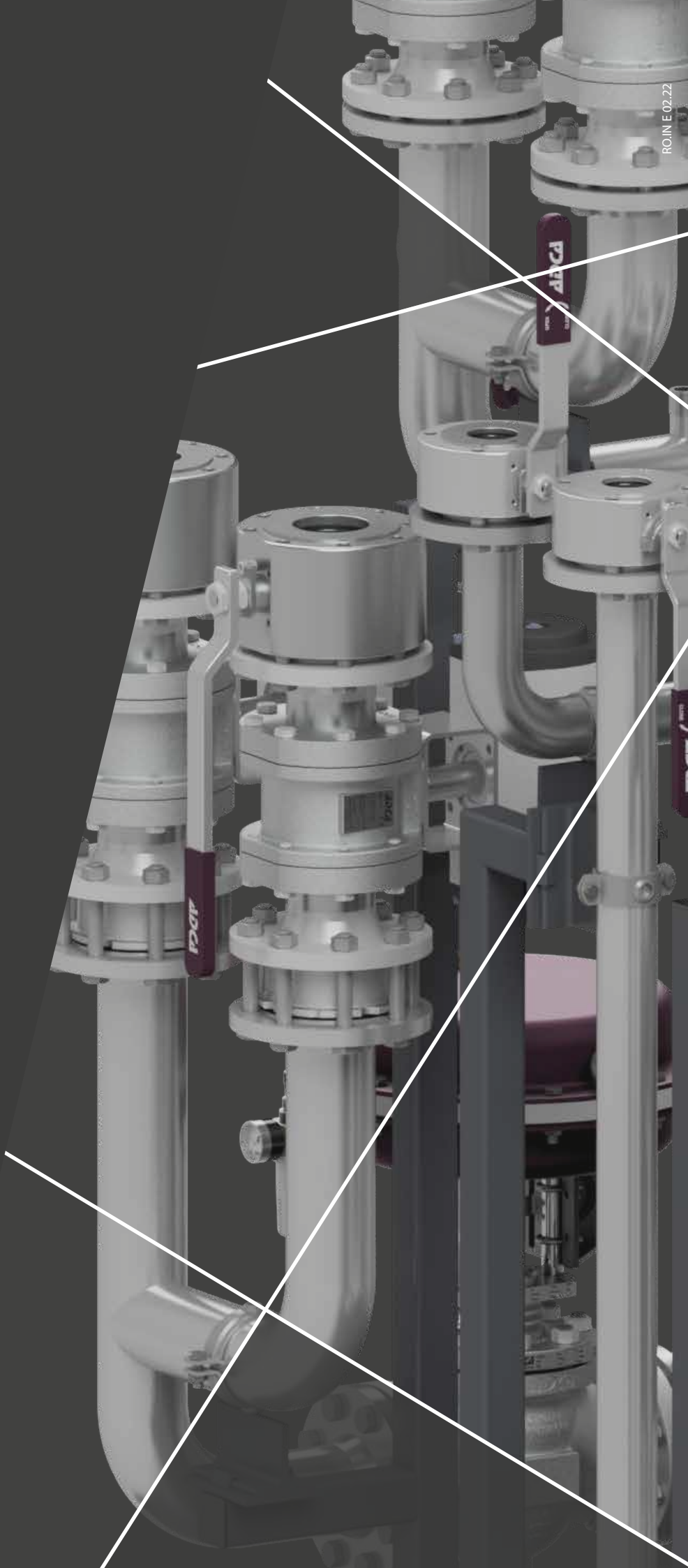

RO.IN E 02.22