CULINARY STEAM FILTERS
ISC20i and ISC20i2

DESCRIPTION

The ISC20i and ISC20i2 high efficiency filters are used to remove contaminated particles from gases such as steam and compressed air.
The optimized construction of these units offers low differential pressure at high flow rates.
All sizes are built in two halves, with 1/4" to 3" being joined by a sanitary clamp ferrule according to DIN 32676 Series A. Whereas 4" to 6" are joined by bolts and nuts. All sizes include plugged drain and vent connections.
The replaceable filter elements are made of sintered austenitic stainless steel and available with 1, 5 or 25 micron absolute rating.

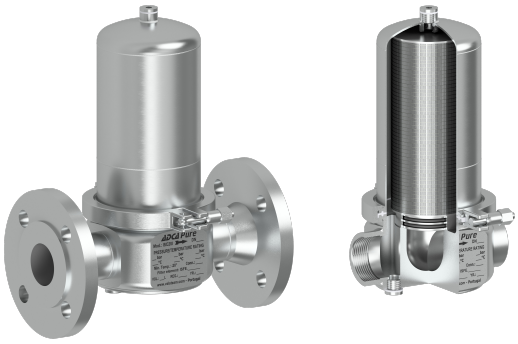

ISC20i (AISI 316L body)
1/4" to 3" – DN 10 to DN 80

MAIN FEATURES

Several retention rates available.
Good durability against aggressive gases.
Porosity level above 50% to ensure high particle and dirt load capacity as well as high flow rates at a low differential pressure.
Regeneration by ultrasonic cleaning.

ISC20i2 (CF8M body)
3/4" to 3" – DN 20 to DN 80

STANDARD SURFACE FINISH

Internal wetted parts upstream of filter elements:
≤ 1,6 µm Ra for model ISC20i.
As casted for model ISC20i2.
Internal wetted parts downstream of filter elements:
≤ 0,76 µm Ra – SF3, for all models.
External:
Satin bead blast finish. As casted body for model ISC20i2.
Other surface conditions see TIS.GIA – General information ADCAPure.

USE:	Steam, compressed air and other gases.
AVAILABLE MODELS:	ISC20i – AISI 316L / 1.4404 stainless steel. ISC20i2 – CF8M / 1.4408 body and AISI 316L / 1.4404 cover.
RETENTION RATES:	1, 5 and 25 micron.
SIZES:	1/4" to 6"; DN 10 to DN 150.
CONNECTIONS:	Female threaded ISO 7 Rp or NPT. Tube weld (TW). Flanged EN 1092-1 PN 16. Flanged ASME B16.5 Class 150. Others on request.
INSTALLATION:	Horizontal installation with the drain connection pointing downwards. See IMI – Installation and maintenance instructions.

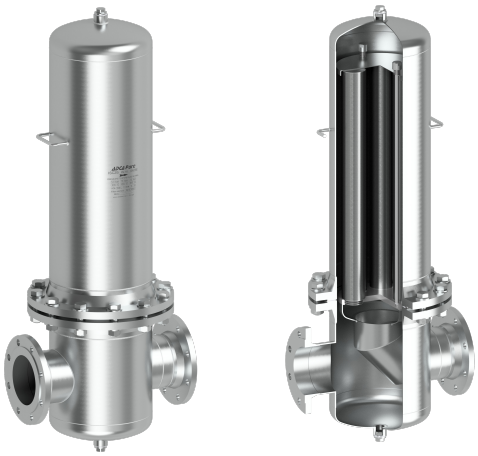

ISC20i (AISI 316L body)
4" and 6" – DN 100 and DN 150

We reserve the right to change the design and material of this product without notice.

CE MARKING – GROUP 2 (PED – European Directive)			
Ps 16 bar	**Ps 12 bar**	**Ps 10 bar**	**Category**
1/4" to 2"L – DN 10 to 50L	–	–	SEP
2"H to 3"L – DN 50H to 80L	3"H – DN 80H	–	1
–	–	4"L to 6"L – DN 100L to 150L	2
–	–	6"H – DN 150H	3

LIMITING CONDITIONS *		
Maximum allowable pressure	1/4" to 3"L – DN 10 to 80L	16 bar
	3"H – DN 80H	12 bar
	4"L to 6"H – DN 100L to 150H	10 bar
Maximum allowable temperature		200 ºC
Minimum allowable temperature		-20 ºC
Maximum operating temperature	EPM filter element seals	150 ºC
	EPM filter element seals (steam)	180 ºC
	Fluoraz® filter element seals	200 ºC
Minimum operating temperature		0 ºC
Maximum cold hydraulic test pressure	1/4" to 21/2" – DN 10 to 80L	28 bar
	3"H – DN 80H	24,5 bar
	4"L to 6"H – DN 100L to 150H	20 bar
Maximum differential pressure		5 bar

* Other limits on request. Maximum operating conditions may be limited by the filter housing end connections due to normative restrictions.
Remark: maximum recommended pressure drop of 0,07 bar.

We reserve the right to change the design and material of this product without notice.

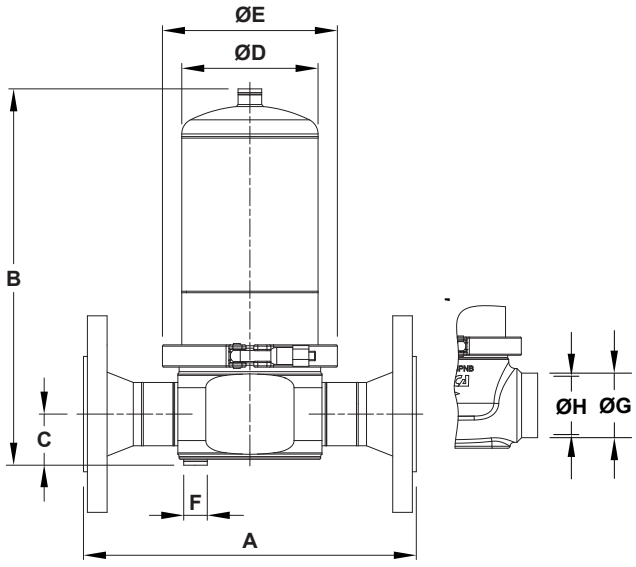

1/4" to 3" – DN 10 to DN 80

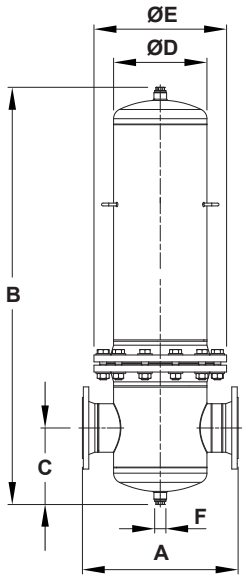

4" and 6" – DN 100 and DN 150

DIMENSIONS – ISC20i (mm)

SIZE *	A THREADED	A ** TUBE WELD	A PN 16	A CLASS 150	B	C	ØD	ØE	F	ØG	ØH	ISFE SIZE	ISFE QTY.	VOL. *** (L)	WGT. *** (kg)
1/4"	108	108	–	–	145	23	70	104	1/4"	13,5	10,3	0310	1	0,4	2,3
3/8"– DN 10	108	108	180	–	173	23	70	104	1/4"	17,2	14	0410	1	0,5	3,7
1/2" – DN 15	108	108	180	203	180	25	70	104	1/4"	21,3	15,8	0420	1	0,5	4,3
3/4" – DN 20	130	130	202	230	210	28	85	118	1/4"	26,7	21	0520	1	0,9	6
1" – DN 25	136	136	212	247	217	31	85	118	1/4"	33,4	27,9	0525	1	1	6,9
11/4" – DN 32	142	142	220	254	279	36	85	118	1/4"	42,2	36,7	0725	1	1,1	8,9
11/2" – DN 40	154	154	254	294	287	39	104	133	1/4"	48,3	42,8	0730	1	2,2	10,6
2"L – DN 50L	163	163	260	297	374	45	104	133	1/4"	60,3	54,8	1030	1	2,8	13
2"H – DN 50H	163	163	260	297	501	45	104	133	1/4"	60,3	54,8	1530	1	3,9	14
21/2" – DN 65	–	216	306	356	637	52	129	170	1/4"	76,1	68,9	2030	1	8,2	21,7
3"L – DN 80L	–	240	340	380	911	60	129	170	1/4"	88,9	82,5	3030	1	11	28,6
3"H – DN 80H	–	240	340	380	918	60	154	198	1/4"	88,9	82,5	3050	1	16	30,4
4"L – DN 100L	–	–	410	395	1070	214	219	340	1"	–	–	2030	3	34,6	65,2
4"H – DN 100H	–	–	410	395	1331	214	219	340	1"	–	–	3030	3	43,7	73,5
6"L – DN 150L	–	–	480	484	1409	256	273	405	1"	–	–	3030	4	74,1	112
6"H – DN 150H	–	–	540	534	1446	265	324	460	1"	–	–	3030	6	106,1	138

* Suffix L corresponds to low capacity design; suffix H corresponds to high capacity design.
** Tube weld (TW) ends according to ASME B36.19 or ISO 1127 depending on the size. See dimensions ØG and ØH. Other dimensions on request.
*** Volume and weight correspond to flanged EN 1092-1 PN 16 design. Weight of filter housing with filter element(s). Other designs may have slightly different values.
Remark: other sizes on request.

DIMENSIONS – ISC20i2 (mm)

SIZE *	A THREADED	A ** TUBE WELD	A PN 16	A CLASS 150	B	C	ØD	ØE	F	ØG	ØH	ISFE SIZE	ISFE QTY.	VOL. *** (L)	WGT. *** (kg)
3/4" – DN 20	130	122	202	227	234	36	85	118	1/4"	26,9	22,3	0520	1	0,9	5,9
1" – DN 25	136	132	212	243	234	36	85	118	1/4"	33,7	28,5	0525	1	0,9	6,4
11/4" – DN 32	136	136	220	250	286	36	85	118	1/4"	42,4	37,2	0725	1	1,3	7,6
11/2" – DN 40	164	164	254	288	302	43	104	133	1/4"	48,3	43,1	0730	1	2	10,4
2"L – DN 50L	164	164	260	291	377	43	104	133	1/4"	60,3	54,5	1030	1	2,7	11,8
2"H – DN 50H	164	164	260	291	503	43	104	133	1/4"	60,3	54,5	1530	1	3,7	12,8
21/2" – DN 65	–	216	306	356	669	60	129	170	1/4"	76,1	70,3	2030	1	7,5	20,8
3"L – DN 80L	–	216	316	356	923	60	129	170	1/4"	88,9	82,5	3030	1	10,8	24,3
3"H – DN 80H	–	240	340	380	934	60	154	198	1/4"	88,9	82,5	3050	1	15,2	28,4

* Suffix L corresponds to low capacity design; suffix H corresponds to high capacity design.
** Tube weld (TW) ends according to ISO 1127. Other dimensions on request.
*** Volume and weight correspond to flanged EN 1092-1 PN 16 design. Weight of filter housing with filter element(s). Other designs may have slightly different values.
Remark: other sizes on request.

We reserve the right to change the design and material of this product without notice.

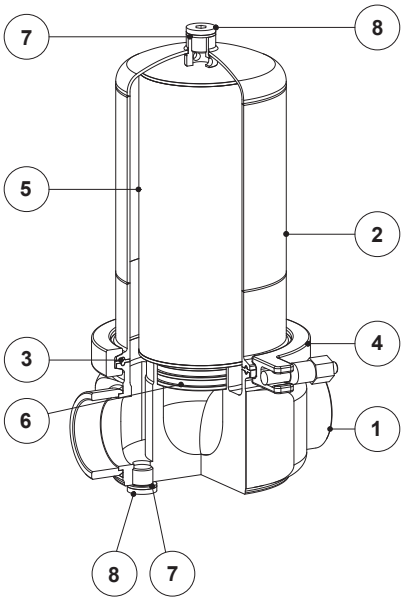

1/4" to 3" – DN 10 to DN 80

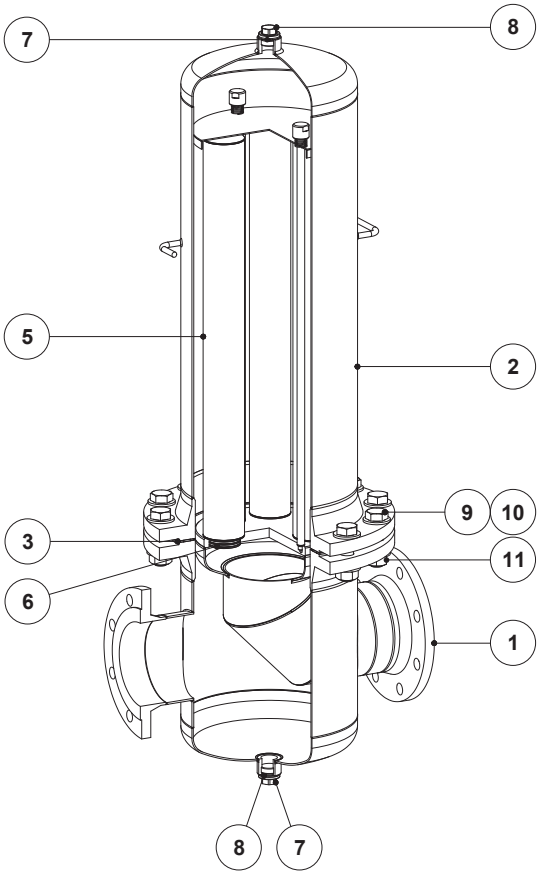

4" and 6" – DN 100 and DN 150

MATERIALS		
POS. Nº	**DESIGNATION**	**MATERIAL**
1	Filter housing body	AISI 316L / 1.4404 (ISC20i)
		CF8M / 1.4408 (ISC20i2)
2	Filter housing cover	AISI 316L / 1.4404
3	* Seal	** PTFE/FPM Envelope (1/4" to 3" - DN 10 to 80)
		** PTFE (4" and 6" – DN 100 and 150)
4	Safety clamp	AISI 316 / 1.4401
5	* Filter element	Sintered AISI 316L
	Filter end caps	AISI 304 / 1.4301
6	* Filter seal o-rings	** EPM; Fluoraz®
7	Gasket	** PTFE
8	Plug	AISI 304 / 1.4301
9	Bolts (4" and 6" – DN 100 and 150)	Stainless steel A2-70
10	Washers (4" and 6" – DN 100 and 150)	Stainless steel A2
11	Nuts (4" and 6" – DN 100 and 150)	Stainless steel A2-70

* Available spare parts. ** Others on request.
FDA / USP Class VI seals certificate on request.
All filters have a serial number. In case of non-standard filter, this number must be supplied if spare parts are ordered.

TYPICAL INSTALLATION – FILTERED STEAM PRESSURE REDUCING STATION

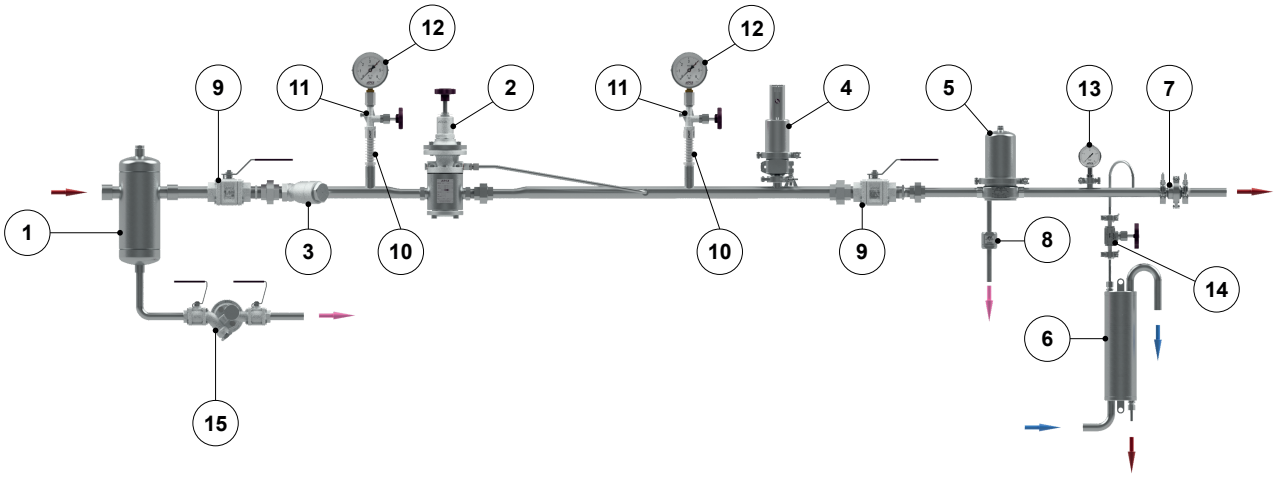

MATERIALS	
POS. Nº	**DESIGNATION**
1	ADCA S16SS Centrifugal humidity separator
2	ADCA PRV47i Pilot operated pressure reducing valve
3	ADCA IS140i Y Strainer
4	ADCA Safety valve
5	ADCAPure ISC20i Culinary steam filter
6	ADCAPure SC32P Sample cooler
7	ADCAPure SRTH10 Check valve
8	ADCA TSS22 Steam trap
9	ADCA M3i1 Three piece ball valve
10	ADCA GSV Gauge siphon
11	ADCA GC400i Gauge cock
12	ADCA MAN100i Pressure gauge
13	ADCAPure SMAN-63R Pressure gauge
14	Sanitary needle valve
15	UniADCA CTS4U Compact trapping station with UFS32 Steam trap

We reserve the right to change the design and material of this product without notice.

ORDERING CODES – ISC20i FILTER HOUSING							
Filter model	**ISC20I**	**.**	**T**	**A**	**.**	**08**	
ISC20i – AISI 316L / 1.4404 filter housing	**ISC20I**						
ISC20i2 – CF8M / 1.4408 body and AISI 316L / 1.4404 cover	**ISC20I2**						
Housing seal material							
PTFE/FPM (1/4" to 3" - DN 10 to 80) or PTFE (4" and 6" - DN 100 and 150)			**T**				
Pipe connection							
Female threaded ISO 7 Rp (only available from 1/4" up to 2")				**A**			
Female threaded NPT ASME B1.20.1 (only available from 1/4" up to 2")				**C**			
Tube weld				**H**			
Flanged EN 1092-1 PN 16				**L**			
Flanged ASME B16.5 Class 150				**U**			
Size							
1/4"						**08**	
3/8" or DN 10						**10**	
...						**...**	
3"L or DN 80L						**80L**	
3"H or DN 80H						**80H**	
...						**...**	
6"L or DN 150L						**150L**	
6" or DN 150H						**150H**	
Special / Extras							
Full description or additional codes have to be added in case of non-standard combination							**E**

ORDERING CODES – FILTER ELEMENT							
Filter element model	**ISFE**	**.**	**X**	**0310**	**.**	**01**	
ISFE – AISI 316L / 1.4404 filter element	**ISFE**						
Filter seals							
Without o-rings			**X**				
EPM			**P**				
Fluoraz®			**F**				
Filter element size according to housing connections							
1/4"				**0310**			
3/8" or DN 10				**0410**			
1/2" or DN 15				**0420**			
3/4" or DN 20				**0520**			
1" or DN 25				**0525**			
11/4" or DN 32				**0725**			
11/2" or DN 40				**0730**			
2"L or DN 50L				**1030**			
2"H or DN 50H				**1530**			
21/2", 4"L, DN 65 or DN 100L				**2030**			
3"L, 4"H, 6"L, 6"H, DN 80L, DN 100H, DN 150L or DN 150H				**3030**			
3"H or DN 80H				**3050**			
Retention rate							
1 micron						**01**	
5 micron						**05**	
25 micron						**25**	
Special construction / Additional options							
Full description or additional codes have to be added in case of non-standard combination							**E**

Order example:
1 ADCAPure filter housing ISC20i with PTFE/FPM seals, threaded NPT, 2"L – Code: ISC20I.TC.50L
1 ISFE filter element with 5 micron retention rate with EPM seals for the above mentioned filter – Code: ISFE.P1030.05
Remark: we recommend a second filter element set as a spare part to ensure minimum downtime when replacing the one in use after saturation.

We reserve the right to change the design and material of this product without notice.