LRQA CERTIFIED ISO 9001

Valsteam ADCA is an EHEDG Member

ADCA ADCAPure

HYGIENIC STEAM FILTERS
ISH10i

DESCRIPTION

The ISH10i high efficiency filters are used to remove contaminated particles from gases such as steam and compressed air.
The optimized construction of these units offers low differential pressure at high flow rates.
All sizes are built in two halves and are joined by a sanitary clamp ferrule according to DIN 32676 Series A.
The replaceable filter elements are made of sintered austenitic stainless steel and available with 1, 5 or 25 micron absolute rating.

MAIN FEATURES

Several retention rates available.
Good durability against aggressive gases.
Porosity level above 50% to ensure high particle and dirt load capacity as well as good flow rate at a low differential pressure.
Regeneration by ultrasonic cleaning.

STANDARD SURFACE FINISH

Internal wetted parts: ≤ 0,51 µm Ra – SF1.
External: ≤ 0,76 µm Ra – SF3.
Other surface conditions see TIS.GIA – General information ADCAPure.
Ultrasonic cleaning.

OPTIONS:	Air vent and bottom drain connections. Other connections and dimensions. Vertical installation design (ISV10i).
USE:	Steam, compressed air and other gases.
AVAILABLE MODELS:	ISH10i.
RETENTION RATES:	1, 5 and 25 micron.
SIZES:	1/2" to 2"; DN 10 to DN 50.
CONNECTIONS:	ASME BPE, DIN and ISO clamp ferrules. Others on request.
INSTALLATION:	Horizontal installation with the drain connection pointing downwards. See IMI – Installation and maintenance instructions.

ISV10i
Vertical inlet/outlet

CE MARKING – GROUP 2 (PED – European Directive)	
Ps 16 bar	**Category**
1/4" to 2"L – DN 10 to 50L	SEP
2"H – DN 50H	1 (CE marked)

We reserve the right to change the design and material of this product without notice.

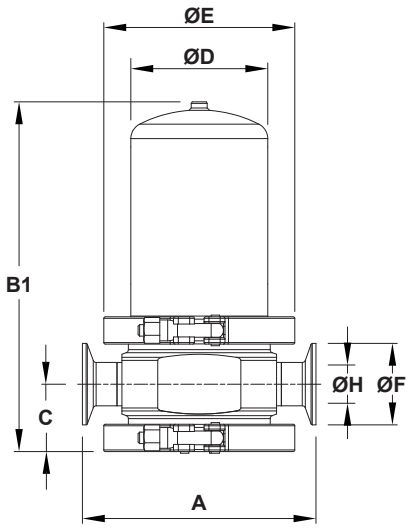

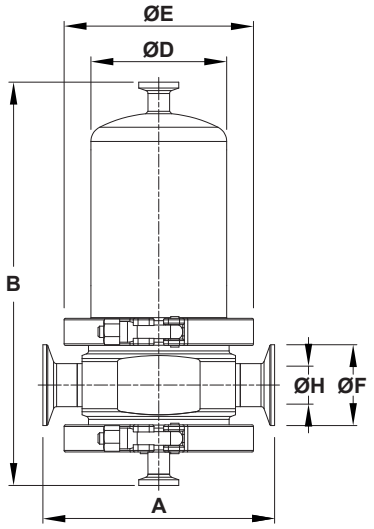

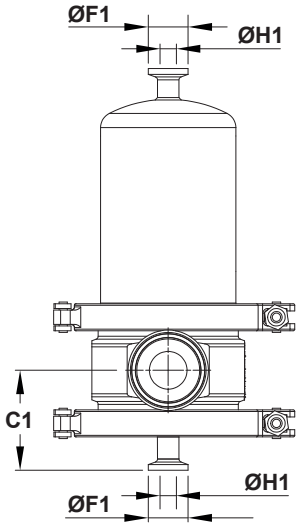

DIMENSIONS – ASME BPE (mm)

SIZE *	A	B	B1	C	C1	D	E	ØF	ØF1	ØH	ØH1	ISFE SIZE	ISFE QTY.	VOL. (L)	WGT. (kg)
1/2"	140	204	154	34	55	70	104	25	25	9,4	9,4	0310	1	0,31	3,3
3/4"	140	237	187	37	58	70	104	25	25	15,75	9,4	0420	1	0,37	3,6
1"	159	272	222	42	63	85	119	50,4	25	22,1	9,4	0520	1	0,84	5,3
11/2"	161	339	288	49	70	85	119	50,4	25	34,8	9,4	0725	1	1,22	6,3
2"L	174	418	369	52	73	104	134	63,9	25	47,5	9,4	1030	1	2,15	7,9
2"H	174	545	496	52	73	104	134	63,9	25	47,5	9,4	1530	1	3,56	8,7

DIMENSIONS – DIN (mm)

SIZE *	A	B	B1	C	C1	D	E	ØF	ØF1	ØH	ØH1	ISFE SIZE	ISFE QTY.	VOL. (L)	WGT. (kg)
DN 10	140	204	154	34	55	70	104	34	34	10	10	0310	1	0,31	3,4
DN 15	140	237	187	37	58	70	104	34	34	16	10	0420	1	0,37	3,7
DN 20	159	272	222	42	63	85	119	34	34	20	10	0520	1	0,8	5,2
DN 25	174	272	222	42	63	85	119	50,5	34	26	10	0525	1	0,81	5,2
DN 32	176	344	295	49	70	85	119	50,5	34	32	10	0725	1	1,19	6,4
DN 40	189	344	295	52	73	104	134	50,5	34	38	10	0730	1	1,64	7,6
DN 50L	189	418	369	52	73	104	134	64	34	50	10	1030	1	2,32	7,8
DN 50H	189	545	496	52	73	104	134	64	34	50	10	1530	1	3,64	8,6

Remark: Clamp ferrules according to DIN 32676-A (for pipes DIN 11866-A – DIN 11850-2).

DIMENSIONS – ISO (mm)

SIZE *	A	B	B1	C	C1	D	E	ØF	ØF1	ØH	ØH1	ISFE SIZE	ISFE QTY.	VOL. (L)	WGT. (kg)
DN 08	140	204	155	34	55	70	104	25	25	10,3	10,3	0310	1	0,35	3,3
DN 10	140	237	187	34	55	70	104	25	25	14	10,3	0410	1	0,45	3,5
DN 15	140	242	192	37	58	70	104	50,5	25	18,1	10,3	0420	1	0,46	3,7
DN 20	145	272	222	42	63	85	119	50,5	25	23,7	10,3	0520	1	0,85	5,1
DN 25	145	282	232	42	63	85	119	50,5	25	29,7	10,3	0525	1	0,89	5,1
DN 32	147	344	294	49	70	85	119	64	25	38,4	10,3	0725	1	1,26	6,3
DN 40	160	344	295	52	73	104	134	64	25	44,3	10,3	0730	1	1,95	7,6
DN 50L	173	433	384	57	78	104	134	77,5	25	56,3	10,3	1030	1	2,69	8,4
DN 50H	173	560	511	57	78	104	134	77,5	25	56,3	10,3	1530	1	3,71	9,2

* Suffix L corresponds to low capacity design; suffix H corresponds to high capacity design.
Remarks: clamp ferrules according to DIN 32676-B (for pipes DIN 11866-B – ISO 1127).
Other sizes on request.

We reserve the right to change the design and material of this product without notice.

LIMITING CONDITIONS *		
Maximum allowable pressure		16 bar
Maximum allowable temperature		200 ºC
Minimum allowable temperature		-20 ºC
Maximum operating temperature	EPM filter element seals	150 ºC
	EPM filter element seals (steam)	180 ºC
	Fluoraz® filter element seals	200 ºC
Minimum operating temperature		0 ºC
Maximum cold hydraulic test pressure		28 bar
Maximum differential pressure		5 bar

* Other limits on request. Maximum operating conditions may be limited by the filter housing end connections due to normative restrictions.
Remark: maximum recommended pressure drop of 0,07 bar.

MATERIALS		
POS. Nº	DESIGNATION	MATERIAL
1	Filter housing	AISI 316L / 1.4404
2	Filter housing cover	AISI 316L / 1.4404
3	* Seal	** PTFE/FPM Envelope
4	Safety clamp	AISI 316 / 1.4401
5	* Filter element	Sintered AISI 316L
	Filter end caps	AISI 304 / 1.4301
6	* Filter seal o-rings	** EPM; Fluoraz®
7	Air vent connection	AISI 316L / 1.4404
8	Drain connection	AISI 316L / 1.4404

* Available spare parts. ** Others on request.
FDA / USP Class VI seals certificate on request.
All filters have a serial number. In case of non-standard filters this number must be supplied if spare parts are ordered.

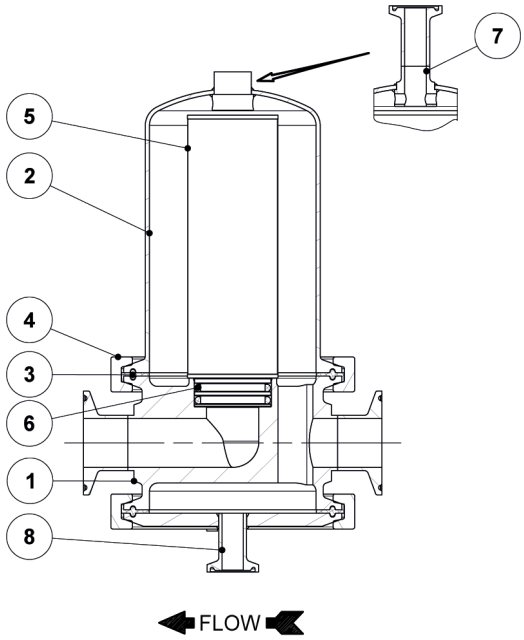

OPTIONS	
BOTTOM DRAIN CONNECTION FOR CLEAN STEAM APPLICATIONS	AIR VENT AND BOTTOM DRAIN CONNECTIONS
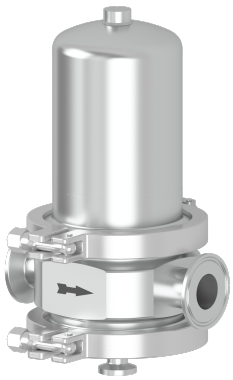	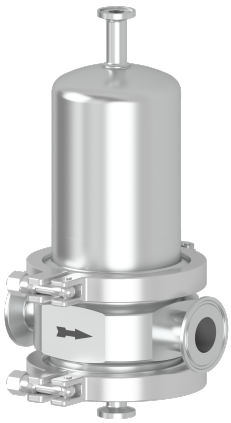

LRQA CERTIFIED ISO 9001

ADCA

ORDERING CODES – ISH10i FILTER HOUSING								
Filter model	**ISH10I**	**.**	**T**	**D**	**X**	**.**	**08**	
ISH10i – AISI 316L / 1.4404 filter housing	**ISH10I**							
Housing seal material								
PTFE/FPM			**T**					
Pipe connection								
Clamp ferrule ASME BPE				**D**				
Clamp ferrule DIN (DIN 32676-A)				**F**				
Clamp ferrule ISO (DIN 32676-B)				**E**				
Drain and vent connections								
Without vent or drain connection					**X**			
With bottom drain connection					**1**			
With bottom drain and vent connection					**2**			
Size								
1/4" or DN 08							**08**	
3/8" or DN 10							**10**	
1/2" or DN 15							**15**	
...							**...**	
2"L or DN 50L							**50L**	
2"H or DN 50H							**50H**	
Special construction / Additional options								
Full description or additional codes have to be added in case of non-standard combination								**E**

ORDERING CODES – FILTER ELEMENT								
Filter element model		**ISFE**	**.**	**X**	**0310**	**.**	**01**	
ISFE – AISI 316L / 1.4404 filter element		**ISFE**						
Filter seals								
Without o-rings				**X**				
EPM				**P**				
Fluoraz®				**F**				
Filter element size according to housing connections								
1/2" ASME BPE	DN 10 DIN	DN 08 ISO			**0310**			
–	–	DN 10 ISO			**0410**			
3/4" ASME BPE	DN 15 DIN	DN 15 ISO			**0420**			
1" ASME BPE	DN 20 DIN	DN 20 ISO			**0520**			
–	DN 25 DIN	DN 25 ISO			**0525**			
11/2" ASME BPE	DN 32 DIN	DN 32 ISO			**0725**			
–	DN 40 DIN	DN 40 ISO			**0730**			
2"L ASME BPE	DN 50L DIN	DN 50L ISO			**1030**			
2"H ASME BPE	DN 50H DIN	DN 50H ISO			**1530**			
Retention rate								
1 micron							**01**	
5 micron							**05**	
25 micron							**25**	
Special / Extras								
Full description or additional codes have to be added in case of non-standard combination								**E**

Order example:
1 ADCAPure filter housing ISH10I with PTFE seals and clamp ferrules ASME BPE 2"L – Code: ISH10I.TDX.50L
1 ISFE filter element with 5 micron retention rate and EPM seals for the above mentioned filter – Code: ISFE.P1030.05
Remark: we recommend a second filter element set as a spare part to ensure minimum downtime when replacing the one in use after saturation.